Simple féminin B

ATS - Raymond-de-Rosa (5215)

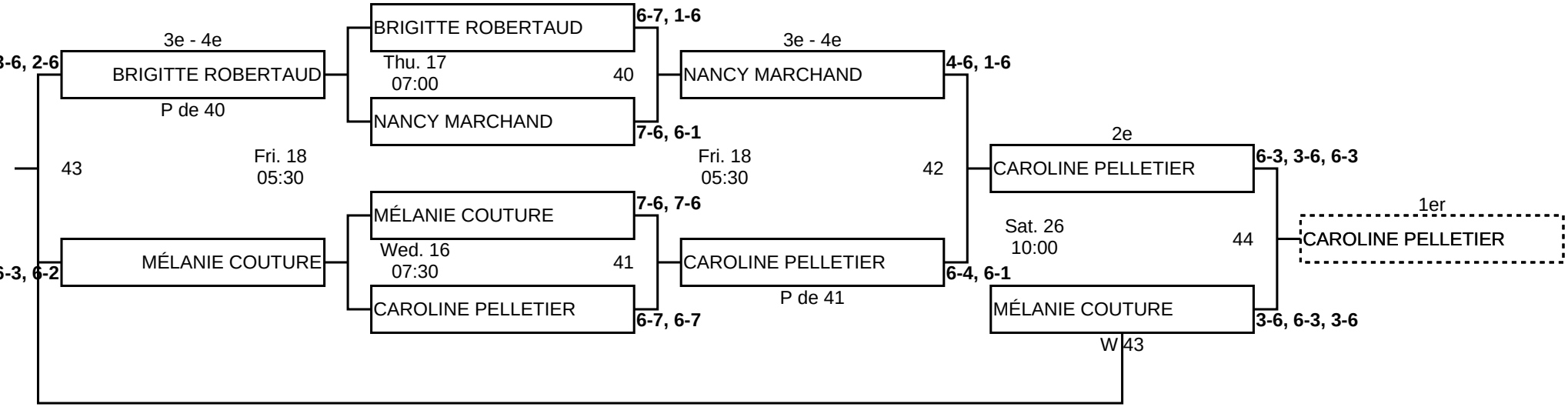

BB

Printed on 26/08/2017 13:04